DRAWING NO.	SHEET	REV.
AFE9C150G064	1/1	0

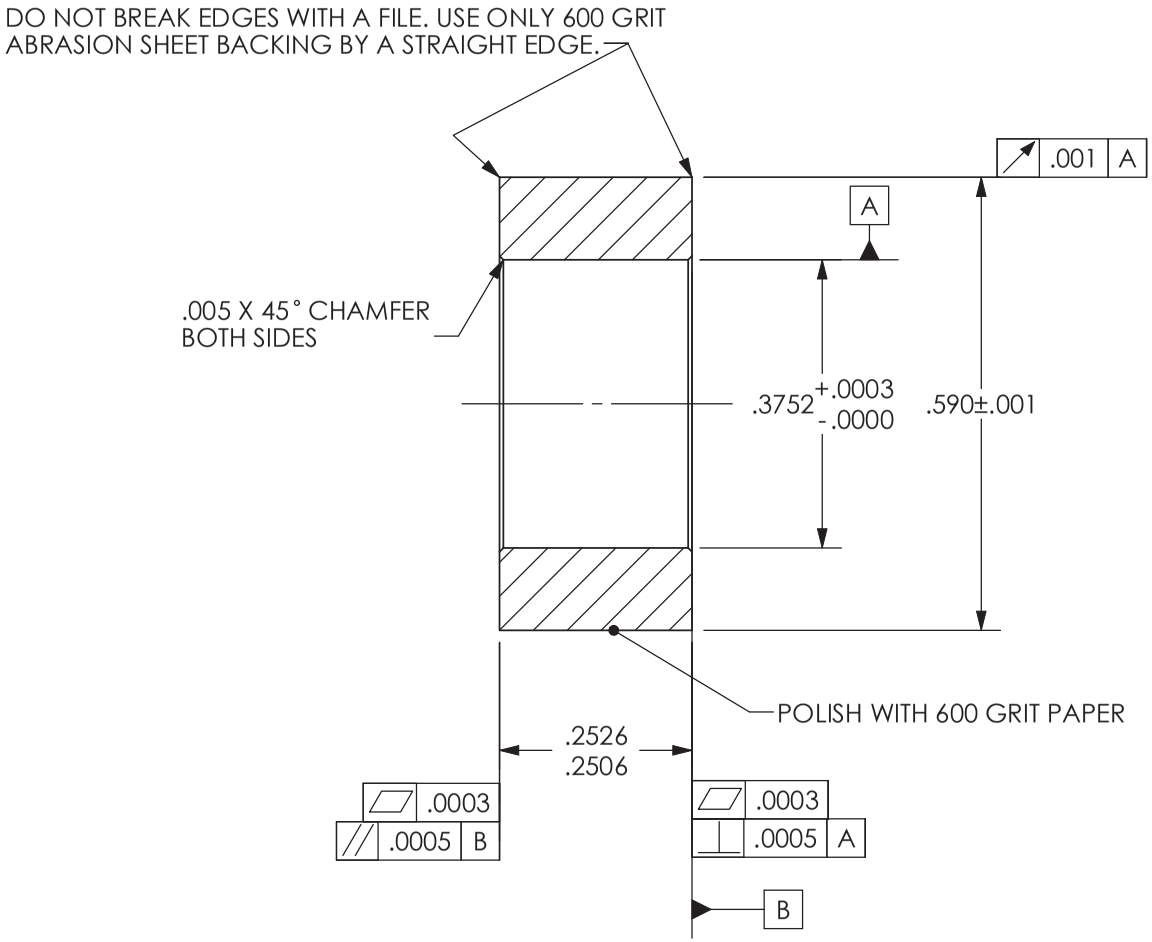

SECTION A-A

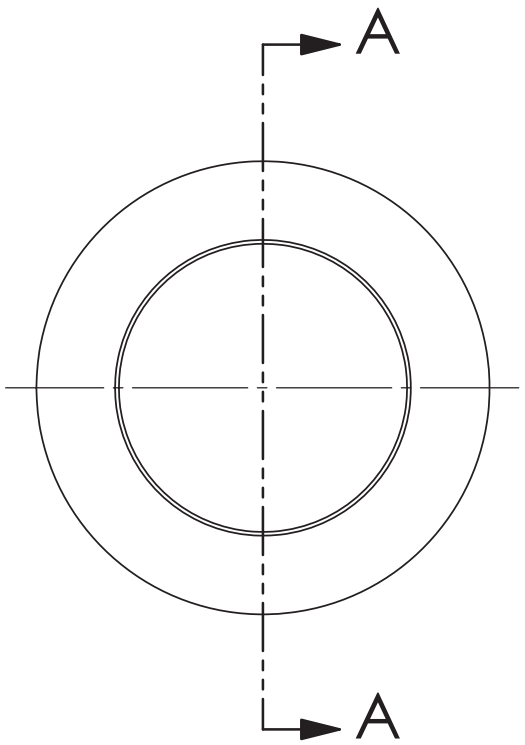

Material: "AS SPECIFIED"

Finish: 16 ALL OVER

TOLERANCES:

x.xxx = ±.005
x.xx = ±.015
x.x = ±.030
DEG = ±1/2°
FRAC. = ±1/64

MACH. SURFACES 125 UNLESS NOTED

SCALE:4:1

Ref: ANSI/ASME Y14.5M-1994

PINE Instrument Company
Grove City, PA. 16127

DWN. JNH	CYLINDER 3 CM SQUARED AREA			
CKD. JNH				
ENG. JNH	DWG. SIZE	DRAWING NO.	SHEET	REV.
DATE 8/26/2010	A	AFE9C150G064	1/1	0

AFE9C150G064.slddrw